Municipal Pipeline Thrust Restraint: Next Generation of Products for Thermoplastic Pipes

Shah Rahman[1], Harlyn Farrell[2]

Bell-and-spigot gasket-joint thermoplastic pipes such as PVC are widely used in pressure applications for potable water distribution and transmission, and sewer force mains. Joint separation due to thrust forces in a system have traditionally been prevented by means of concrete thrust blocks or lug-type mechanical joint restraint devices, or a combination of the two. All of these methods present several challenges for contractors and engineers which includes corrosion, time consuming installation, and human-error. Most importantly, unbeknownst to a large section of the specification and design engineering community, the vast majority of lug-type restraints being used in municipal pressure pipelines today do not meet ASTM F1674, the only governing standard test method for joint restraint products for use with PVC pipe. The next generation of thrust restraint devices attempts to eliminate these problems; several products have been introduced to the market for fitting-to-pipe and pipe-to-pipe restraint and have already been installed at various municipalities in Texas. This paper discusses the topic of proper thrust restraint design methods recommended by AWWA, technical standards for joint restraint products, and details of the "next generation" restraints. Case studies of successful installations at municipalities around Texas are also presented.

INTRODUCTION

Unbalanced hydrostatic and hydrodynamic forces that occur in a pressure pipeline due to changes in the direction of flow or in the cross sectional area of the line is referred to as thrust. Thrusts also occur at dead-ends and during the opening and closing of valves and hydrants. In municipal applications, hydrodynamic thrust forces are ignored as they are insignificant due to the range of pressures and velocities that are characteristic of such systems (Moser 2001). Thrust can result in joint separation in bell-and-spigot push-on joints if it is not counter-balanced with an equal and opposite reaction force. The common methods of containing thrust in the North American water works industry includes the use of concrete thrust blocks or external mechanical joint restraints (lug-type restraints), or a combination of the two. When lug-type restraints are utilized on their own, it is usually necessary to also restrain one or more pipe-to-pipe joints on either side of an appurtenance. The total length of pipe to be restrained is calculated based on various parameters such as the system test pressure, nominal diameter of the pipe, soil conditions, bedding method, depth of bury of the line, configuration of the appurtenance, type of pipe material, etc.

[1] Vice President – Technical & Municipal Services, **S&B Technical Products/Hultec**, 1300 E. Berry St., Fort Worth, TX 76119; tel. (817) 923-3344; fax (817) 923-1339; srahman@sbtechprod.com
[2] Water / Wastewater Superintendent, **City of McKinney Public Works Dept.**, 1550B S. College, P.O. Box 517, McKinney, TX 75070; tel. (972) 547-7360; fax (972) 547-2610; hfarrell@mckinneytexas.org

Both thrust blocks and lug-type joint restraints are external to a piping system and pose several disadvantages, including installation inconveniences, corrosion, and human-error. Recently, several products have been introduced for fitting-to-pipe and pipe-to-pipe restraint of PVC lines which are internal to a joint. The BullDog™ joint restraint is integral to the bell of a PVC pressure pipe and is incorporated into the pipe during manufacture, and is used to restrain PVC pipe-to-pipe joints. The MJ Field Lok-PV® is a self-restraining gasket that incorporates a serrated grip ring within a mechanical joint gasket and is designed for restraining ductile iron fitting-to- PVC pipe joints. A third product is fabricated AWWA C900 PVC fitting that incorporates the BullDog™ joint at each connection.

THRUST RESTRAINT METHODS - INDUSTRY STATUS QUO

Concrete Thrust Blocks: Thrust blocks are masses of concrete that transfer and distribute the thrust forces at a point in the pipeline to the surrounding soil structure, preventing the separation of any unrestrained joints. The soil in front of and below a thrust block must be able to resist the thrust in the pipeline using horizontal normal stresses on the active and passive faces of the concrete block, vertical normal stresses on the base of the concrete block, shear stresses on the base of the concrete block, and the weight of the concrete block and soil above it (Thorley et al. 1994), figure 1.

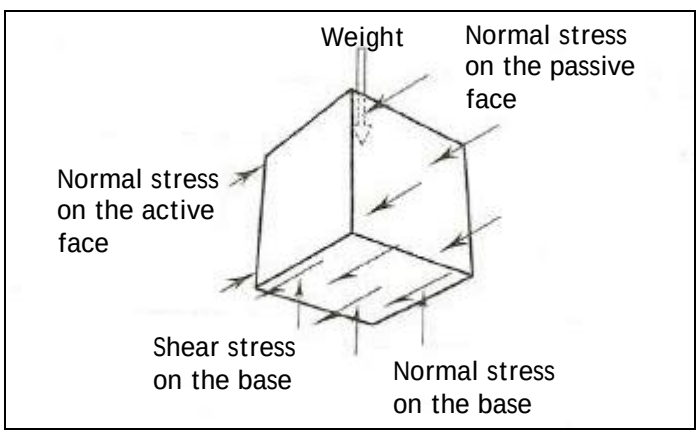

Figure 1: Soil Structure Resistance Components on a Concrete Thrust Block (Thorley et al. 1994)

The bearing surface area of a thrust block is the most critical factor in its design as this area distributes and transfers the resultant thrust forces to the soil mass adjacent to the fitting. The size and shape of a block is determined by the forces to be restrained, the size and type of the pipe fitting or appurtenance, and in-situ soil strength and conditions.

While corrosion resistance is an inherent advantage of non-reinforced concrete thrust blocks, there are several issues that present concerns:

1) Actual replication of a thrust block in the field per the engineer's design – experience shows that most Contractors, at best, simply pour a mass of concrete in the location indicated in the plans and rarely ever use forms to

replicate the dimensions of the thrust block specified by the engineer. In the worst case, bags of Quickcrete are placed in their entirety behind fittings, the idea being that groundwater will eventually infiltrate the bag and cause its contents to solidify in the long run!

2) Soil bearing capability of in-situ soils – the soil must be able to withstand the weight of the mass of concrete without settlement in the long run, so weak soils may not be the ideal location for the placement of a thrust block. Gradual sinking of a block would mean settlement of the appurtenance and a portion of the pipeline with it until joint separation occurs.
3) Availability of sufficient space for the block(s) - a certain amount of space is required to accommodate a block; this is a particular challenge in developed urban environments.
4) Time required for the concrete to dry before the line can be backfilled – this is usually 24 hours so until the block has dried, the contractor can neither backfill nor hydro-test the installed line.
5) Future excavations in the vicinity of the block – depending on the size of the block, future excavations may be limited as the soil around and underneath the thrust block can not be disturbed.

Joint Restraints: Since their introduction more than forty years ago for use with ductile iron pipes, the acceptance and use of joint restraint devices has steadily increased. PVC joint restraints have been widely used for the last fifteen years. It is estimated that more than half of all municipalities in the US use them today. Figures 2 through 4 show various available joint restraints for PVC systems, most notably the wedge-types and the serrated-types. While joint restraints eliminate many of the problems associated with thrust blocks, they too have their share of disadvantages:

1) They are metallic and external to the pipeline and must be installed on the outside of a pipe joint --- this makes them susceptible to corrosion.
2) Installation is time consuming and subject to human error --- the tightening of nuts and bolts and wedges is an arduous and time consuming task, leading to higher costs for the Contractor as well as the Municipality.
3) The vast majority of joint restraints in North America do not meet the requirements of ASTM F1674, *Standard Test Method for Joint Restraint Products for Use with PVC Pipe*. Devices that do cost double. Most products meet UNI-B-13, which was a less stringent standard from the Uni-Bell PVC Pipe Association but that document was withdrawn in 1996 after publication of ASTM F1674 and is no longer in publication.
4) Devices that use wedges, figure 2, subject the pipe wall to point loading due to over-tightening of wedges. Even torque-off bolts commonly cause deformities in the walls of PVC pipe. Ultimately, this can undermine the structural integrity of the pipe and lead to failure or leakage at joints. Uneven tightening of nuts and bolts also leads to joint leakage.
5) Generally, serrated-type products, figure 3, are incapable of sustaining internal pressures as high as those products that meet ASTM F1674, making the

system subject to the possibility of leakage and failure in the future. The rods in particular play a role in the failure mechanism of these devices.

Figure 2: Wedge-type Joint Restraint for Pipe-to-Pipe and Fitting-to-Pipe Joints (Star Pipe Products 2005, EBAA Iron 2005)

Figure 3: Serrated and Plain Split Ring and Double Serrated Split Ring Pipe-to-Pipe Joint Restraints (EBAA Iron, 2005)

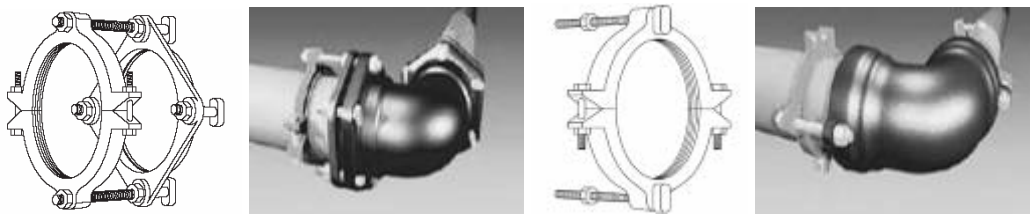

Figure 4: Serrated-type PVC Pipe-to-Ductile Iron Mechanical Joint Fitting and to DI Fitting with Restraining Ear (EBAA Iron, 2005, Star Pipe Products 2005)

DESIGN THEORY

To properly design a pressure pipeline, it is necessary to understand the basic theory of thrusts and the parameters that counterbalance it. While a detailed explanation for design purposes is outside the scope of this paper, the American Water Works Association (AWWA) Manual of Water Supply Practices, M23, *PVC Pipe – Design and Installation* should be consulted for reference. Much of the discussion below is obtained from M23.

Figure 5 is used to explain forces in a horizontal bend. The total thrust (or unbalanced forces) at the bend can be described by:

$$\mathbf{T = 2PA \sin \Delta/2} \qquad (1)$$

Where, **T** = resultant thrust force, lb
P = internal pressure, psi
Δ = angle of deflection, degrees
A = internal area (based on diameter of sealing element), in^2

The internal area, A, is based on the maximum inside diameter of the sealing element, the gasket. In the case of joints in a pipeline where the gasket is seated within the bell, the internal area A is based on the pipe outside diameter at the joint.

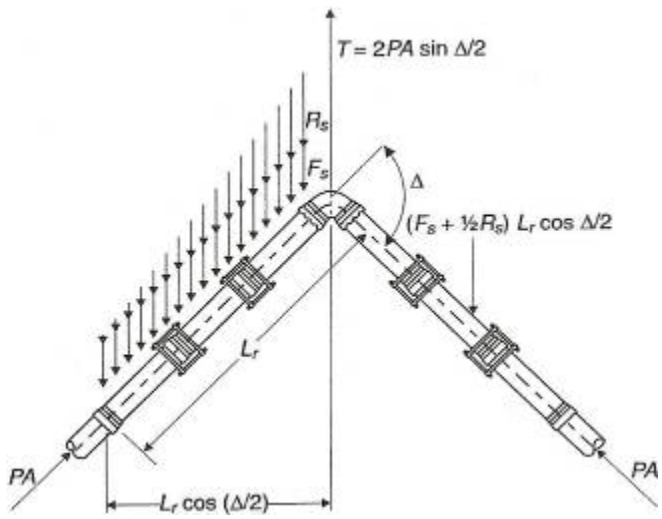

Figure 5: Resultant Frictional and Passive Pressure Forces on a Pipe Bend
(*AWWA M23, PVC Pipe – Design and Installation*)

In straight lengths of a buried pipeline, thrust forces at any given joint is counterbalanced by equal and opposite reactions from adjacent joints. Frictional resistance between the pipe and surrounding soils also provides some counter force to the thrusts. However, when the direction of flow changes as in the horizontal bend shown in figure 5, forces on adjacent joints do not balance each other but combine to create a resultant force that tends to push the bend away from the pipeline. The size of this thrust force is directly proportional to the angle Δ.

When using thrust restraints only, without concrete blocks, the pipeline behaves as its own thrust block, transferring the resultant thrust forces to the surrounding soils by itself. In a properly designed pipeline using joint restraints only, the following parameters balance thrust forces:

1) bearing strength of the soil, R_s, and
2) frictional resistance between the pipe and soil, F_s

In the example shown in figure 5, resistance to thrust is generated by the passive resistance of the soil as the fitting tries to move, developing resistance in the same way as a concrete thrust block. Additionally, friction between the pipe and the soil generates resistance to joint separation.

L_r is the length of pipe along which resistance is provided by the passive resistance, R_s, and soil friction resistance, F_s. This is the length of pipe which has to be restrained. The number of joints to be restrained is calculated by dividing L_r by the length of a segment of pipe. L_r will vary by the size of the pipe, the soil type, trench type, depth of bury, maximum anticipated pressures in the line, and a number of other parameters. In some instances, less than one full length of pipe will have to be restrained, so it suffices to only restrain the fitting-to-pipe connections on both ends of the fitting.

$$\mathbf{L_r = \frac{PA \tan(\Delta/2)\,(SF)}{F_s + 1/2Rs}} \qquad (2)$$

Where, $\mathbf{L_r}$ = Length of the pipeline to be restrained
SF = factor of safety
$\mathbf{F_s}$ = pipe to soil friction, lb/ft
$\mathbf{R_s}$ = bearing resistance of soil along pipe, lb/ft

Details on the calculation of both F_s and R_s can be found in the AWWA Manual of Water Supply Practices, M23.

TECHNICAL STANDARDS

Standards for the performance of joint restraint products are there to ensure that neither the short term nor the long term hydrostatic or structural capabilities of the pipe are lowered by the thrust restraint devices being used with them. In 1988, the Uni-Bell PVC Pipe Association published UNI-B-13, *Recommended Standard Performance Specification for Joint Restraint Devices for Use With Polyvinyl Chloride (PVC) Pipe*. The standard required three tests to prove the performance of a restraint device when attached to a PVC pipe joint:

1) Burst pressure test to verify the effect of a joint restraint on the short term strength of the pipe,
2) 1000-hour sustained pressure test to ensure the long term strength of the pipe fitted with the restraint, and
3) cyclic strength of the pipe and restraint through the one million-cycle test.

There were two key things that this standard did not require of manufacturers --- it did not specify that the rating of the device had to be at the same pressure rating of the pipe system it was being used on, and it did not require a manufacturer to test all sizes and all pressure ratings. Essentially, a manufacturer could run the tests on one particular size and claim that other pressure rated devices of that size met UNI-B-13. Or, they could run the tests on one specific pressure rated device and claim that all other sizes of that pressure

rating met the requirements of UNI-B-13. This standard, though published by a trade association and not a formal standardization organization such as ASTM, became the only existing formal performance guide for PVC pipe thrust restraint manufacturers and municipal engineers for almost a decade. UNI-B-13 was updated in 1992 and 1994.

In 1996, UNI-B-13 was utilized to write a more stringent standard: ASTM F1674, *Standard Test Method for Joint Restraint Products for Use with PVC Pipe*. In that same year, UNI-B-13 was officially withdrawn and publication ceased. All manufacturers were given a two year period to change markings on their joint restraint product lines and gain compliance with the new ASTM standard. More than a decade later however, there continues to be products manufactured to the UNI-B-13 standard which are still accepted at numerous municipalities throughout North America. Two major additional points added to ASTM F1674 made it more rigorous than UNI-B-13:

1. Every size and every pressure rating of a joint restraint product line must be able to pass the three tests (manufacturers can no longer extend standard compliance to all sizes and pressure rated products simply by passing the tests for one size and/or one pressure rating)
2. The product must be of the same pressure class as the pipe that it is going to restrain

It is important for specifications engineers to understand these differences. The M23 Manual of Water Supply Practices clearly states "Only joint restraint devices manufactured and tested for use in PVC pressure piping systems should be considered. All devices should be required to conform to ASTM F1674" (AWWA 2002).

NEXT GENERATION PRODUCTS

BullDog™ Integral Joint Restraint System: This joint is designed for pipe-to-pipe connections and meets all the requirements of ASTM F1674. The current version is designed for integration into pipes manufactured to AWWA C900 standard, diameters 4-inch (100 mm) through 12-inch (300 mm). The mechanism consists of a metal casing that sits adjacent to the Rieber[3] gasket in the bell; the casing is molded into the "raceway" of the bell during pipe belling. A C-shaped grip-ring with several rows of uni-directional serrations is manually inserted into the casing after the pipe has been hydro-tested following belling. Both casing and grip rings are made of ductile iron, coated with the AquaArmor™ corrosion protection system. When the pipe arrives at a jobsite, the pipe bell already contains the casing with the grip ring inserted in it. Figure 6 is a cross-sectional drawing of the components of the joint.

[3] The Rieber is a generic name used to describe a metal-reinforced rubber gasket which is incorporated into the pipe during manufacture and belling. This type of gasket is used in more than 95% of PVC pipes manufactured in North America today. It eliminates fish-mouthing and a number of other issues previously associated with non-reinforced, dual-durometer type pipe seals.

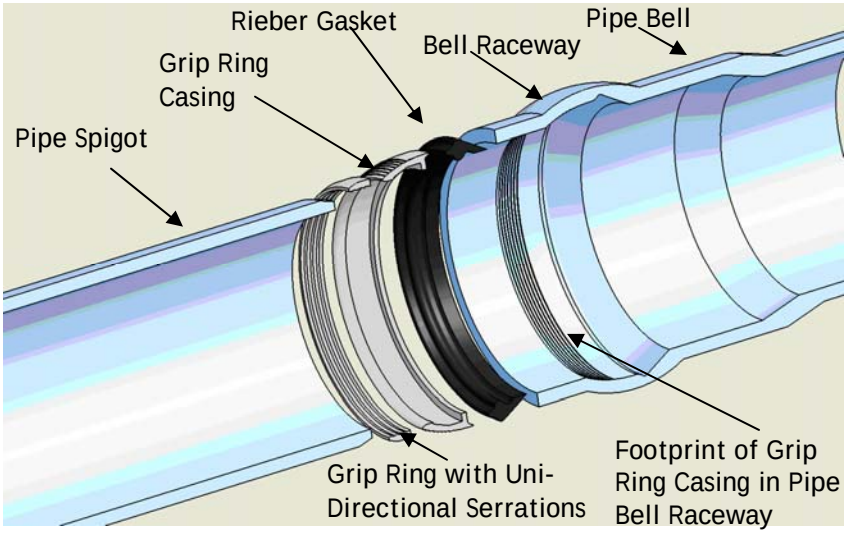

Figure 6: BullDog™ Restrained Joint Pipe Components

In the field, the joint is assembled like a regular push-on joint --- the spigot is pushed into the bell up to the insertion mark. Figure 7 shows a cross section of the joint after assembly.

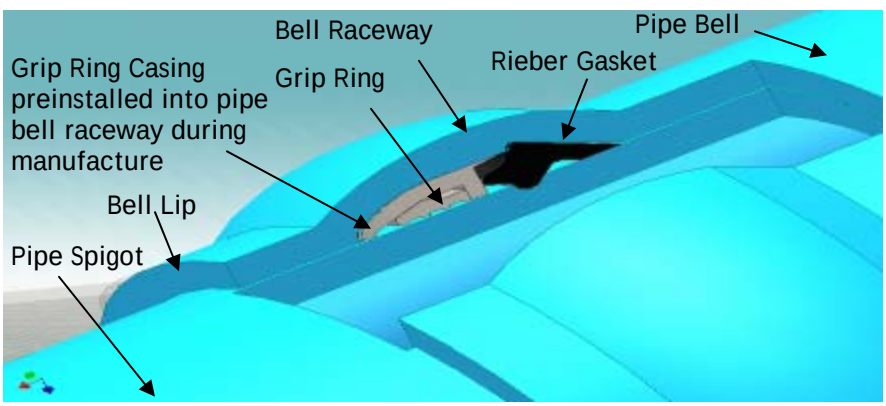

Figure 7: Cross Section of Installed BullDog™ Joint

The uni-directional serrations on the grip ring only allow entry of the spigot through it but do not allow its withdrawal. Any opposing movement of the spigot once it is inserted through the grip-ring causes the serrations in the ring to “bite” circumferentially and uniformly onto the spigot wall. The grip ring is designed to be 10/1000 of an inch smaller than the outside-diameter of the adjoining spigot; this ensures a snug fit as the spigot is pushed through the ring. Once the pipe is put into service, expansion of the spigot and its backward movement as a result of hydrostatic pressure application within the pipeline causes the grip ring serrations to become evenly wedged into the wall of the spigot, thus engaging the restraint mechanism fully. At higher pressure, there is also some expansion of the bell. The depths to which the serrations penetrate the spigot wall do not exceed 10% of the wall thickness (per AWWA). Sealing of the joint is carried out by the

Rieber gasket. The gasket also prevents the fluid within the pipeline from coming into contact with the restraint mechanism (grip ring and casing).

The major advantages of the integral joint over traditional external restraints include:

1) Installation costs are negligible since there are no nuts and bolts or wedges to tighten. It is no different from a regular gasket-joint PVC pipe.
2) Human errors such as over-tightening or under-tightening of nuts and bolts or wedges eliminate the possibility of joint leakage or point loading of the pipe wall.
3) The possibility of corrosion of the restraint mechanism is dramatically reduced. Casing and grip ring are coated with a water-based rubber toughed phenolic resin. If the metallic casing is exposed to ground water or soils entering through the gap between the bell-lip and the spigot, protection is provided by the coating.
4) The joint meets all requirements of ASTM F1674.

MJ Field Lok-PV® Self Restraining Gasket for Mechanical Joints: This self restraining Mechanical-Joint gasket, figure 8a, is another innovation that has been available on the market for over a year. At the time of the writing of this paper, more than 70,000 units had been sold. It is specifically designed for use in mechanical joints (DI fitting-to-PVC pipe joints), in lieu of the traditional external restraints shown in figures 2 and 4.

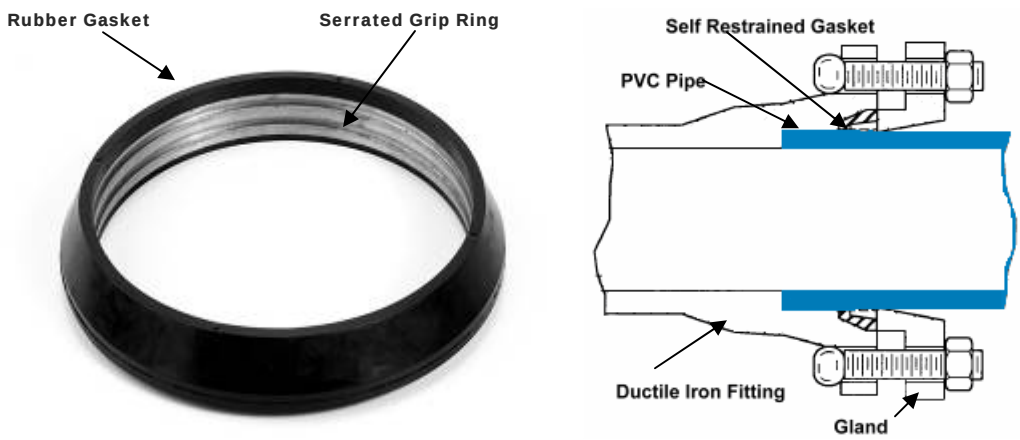

Figure 8a, b: Self-restraining Gasket; Cross-Sectional View After Installation

This restraining device has two components – a serrated C-ring, similar to the one discussed in the previous section, and a rubber gasket. The C-ring is inserted into a groove on the inside wall of the rubber gasket, forming a snug fit between the rubber and the ring. Installation involves inserting the self-restraining gasket into the mouth of a ductile iron mechanical fitting. The adjoining piece of PVC pipe is fitted with a gland, and then inserted through the ring and into the mouth of the mechanical fitting. Just like the BullDog™, the serrations on the ring are uni-directional, allowing the pipe to go through, but not to be withdrawn. The gland on the PVC pipe is then bolted to the flange on the mechanical fitting. Tightening of the flange and the gland cause the gasket to

become compressed, forming a seal at the joint, and simultaneously, the serrations embed themselves into the outside wall of the pipe, figure 8b.

This device has passed the Underwriter Laboratories (UL) certification and is currently available in 4-inch (100 mm) through 12-inch (300 mm) sizes. The MJ Field Lok-PV® eliminates the need to use lug-type restraints such as those shown in figures 2 and 4. It is easier to assemble and does not cause point loading as is the case with wedge-type restraints.

BullDog™ Fabricated PVC Pressure Fittings: PVC fabricated fittings manufactured to meet AWWA C900 are used in both water and sanitary sewer force-mains; their use continues to grow annually. Traditionally, fabricated fittings have been restrained using either concrete thrust blocking or lug-type restraints such as the one shown in Figure 9a.

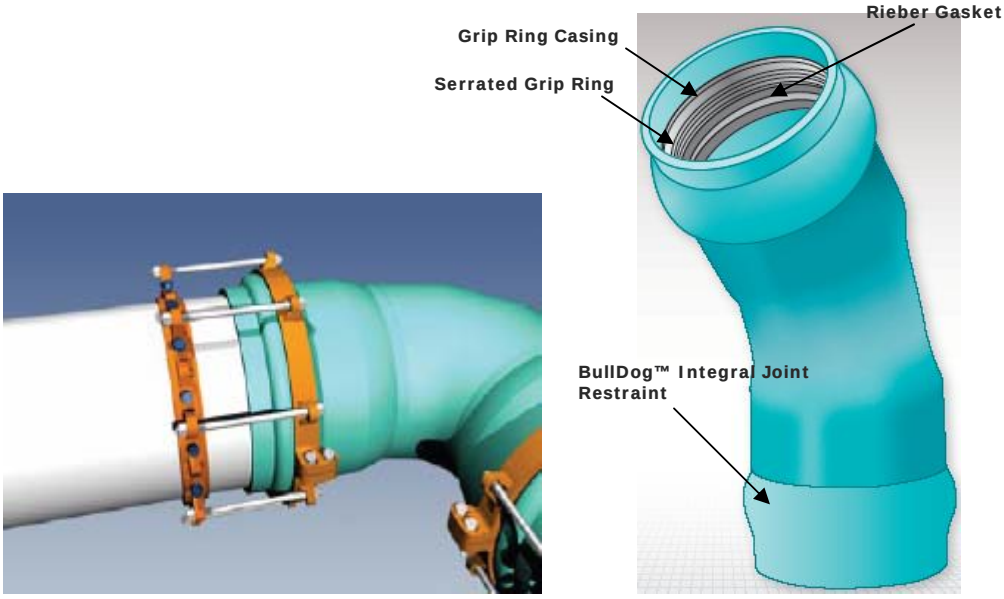

Figure 9a, b: Lug-Type PVC Pipe-to-Fabricated Fitting Restraint (EBAA Iron, 2005), 45-degree AWWA C900 PVC Fabricated Fitting w/ BullDog™ Restrained Joints

The latest addition to the next generation of joint restraint products is the BullDog™ joint fabricated fitting. All joints of an appurtenance such as a 45-degree or a 90-degree bend or a tee incorporate the integral restraint system. The joints function the same way as the BullDog™ pipe-to-pipe product discussed earlier, eliminating the need for lug-type restraints and concrete blocking. Installation involves the insertion of a pipe spigot end into each bell-end of the fitting, then permitting the restraint mechanism to engage once the line is placed into service.

CASE HISTORIES

<u>City of McKinney, TX, Case History 1</u>: Approximately 1100 ft of a 6-inch cast iron pipeline that was causing water quality issues due to extensive tuberculation was removed and replaced with an 8-inch, AWWA C900, DR18 (pressure class 150 psi) PVC pressure pipeline. The tie-in's at both ends of the pipe required multiple fittings, horizontal bends, reducers and tees which would have to be installed using lug-type restraints and/or concrete thrust blocks. To eliminate both external restraints and thrust blocking at the first tie-in, beyond a 6X8 reducer, several 8-inch MJ-Field Lok-PV® gaskets were used for fitting-to-pipe connections, as well as the BullDog™ for pipe-to-pipe connections, figure 10a, b. The BullDog™ pipe was manufactured by Royal Pipe Systems, Toronto, Canada.

Figure 10a, b,c : MJ-Field Lok-PV® Used at Valve Tie-in w/ BullDog™ joint for pipe-to-pipe restraint, MJ-Field Lok-PV® Used w/ 45-degree Fitting-to-pipe Connection,

At the second tie-in, once again, both BullDog™ joints and MJ-Field Lok-PV® gaskets were used for pipe-to-pipe and pipe-to-appurtenance restraint. Appurtenances included valves, 45-degree bends, and a 6X8 reducer, figure 10c.After installation, the system was pressure tested to 150 psi without any problems. Figure 11 shows all the bags of concrete which were originally delivered to the job site; none of it was used.

Figure 11: Unused Concrete at the Job Site, Originally planned for Use on the Tie-In's

<u>City of McKinney, TX, Case History 2</u>: This job at the City of McKinney took place in Summer 2007 and involved the use of two AWWA C900 fabricated fittings to tie together an 8-inch DR18 PVC pressure line that replaced a corroding 6-inch cast iron main. The project was located at the intersection of Coleman St. and Irwin St. Even though fabricated PVC fittings are widely used in sewer force-main applications, this was the first known installation of fabricated PVC fittings in a potable water system in the Dallas-Fort Worth Metroplex. The fabricated fittings were manufactured by Specified Fittings, Inc. of Bellingham, Washington, and incorporated the BullDog™ integral joint restraint system, figure 12a. This eliminated the need to use either lug-type joint restraints or concrete thrust blocks. MJ-Field Lok-PV® was utilized to restrain a sleeve, figure 12b.Following installation, the system was pressure tested to 150 psi.

Figure 12a, b, c: BullDog™ Restrained Fabricated PVC Fittings

<u>City of Richardson, TX</u>: The first job at the City of Garland was placed into the ground in Summer 2007, underneath a parking lot of an apartment complex at the intersection of Cumberland Drive and Lake Drive, through a bored casing, figure 10.

Figure 10: BullDog™ Joint Pipe Placed into Casing Under Parking Lot

After replacing an existing cast iron line with PVC pipe on Laura Drive and Loma Drive that serves 29 houses, the dead-end section of the pipeline on Loma Dr. was connected to the main line on Lake Drive by means of 260 ft of 6-inch, DR 18 (pressure class 150 psi),

AWWA C900 BullDog™ integral joint restraint PVC pipe, manufactured by Northern Pipe Products, Fargo, ND. The reason for removing the dead-end and making it a looped line was to eliminate stagnant water issues at residences on Laura Dr. and Loma Dr. The BullDog™ restrained pipe was installed through a 12-inch metal casing pipe that was bored underneath the parking lot. The Contractor was Tri-Con Utilities, Rowlett, TX. Valves were placed at both tie-in's on the BullDog™ restrained line. Casing spacers were placed around the outside of the pipes before insertion into the casing; in particular, over-insertion of spigot into bell during joint assembly was prevented by placing the edge of a casing spacer in alignment the insertion mark on the pipe spigot, figure 11a, b.

Figure 11a, b: Casing Spacer Edge Aligned with Insertion Mark to Prevent Over-insertion During Assembly, BullDog™ Joint Pipe Being Pushed into Casing

CONCLUSION

The common problems associated with concrete thrust blocks can be eliminated through the design of systems that use only joint restraints. Traditional lug-type joint restraints, however, are external to pipe joints and are prone to corrosion. It is also labor intensive to assemble them and human error can cause both leakage and failure of the pipe wall through point loading of wedges. The vast majority of traditional joint restraint devices in the market today also do not meet the requirements of ASTM F 1674. Even though they claim to meet UNI-B-13, this document is no longer in publication and was withdrawn in 1996. Municipalities should update their materials specifications to reflect this fact and also become more selective in their choice of allowable joint restraint devices. The BullDog™ integral pipe-to-pipe restraint system, BullDog™ fabricated PVC fitting, and the MJ Field Lok-PV® make up the "next generation" of joint restraint devices, effectively eliminating much of the disadvantages associated with both traditional joint restraints and thrust blocks. The case histories discussed in this paper proved all of these products to be worthy additions to the waterworks industry. The savings realized in installation time was advantageous to the Contractor in all cases.

References

American Water Works Association (2002), *Manual of Water Supply Practices M23: PVC Pipe – Design and Installation*, Denver, CO, pp. 42-52.

EBAA Iron, Inc. (2005), product literature

Moser, A. (2001), *Buried Pipe Design*, McGraw-Hill.

Rahman, S., and R. Watkins (2005), *Longitudinal Mechanics of Buried Pipe: Analysis of Thermoplastic Pipes of Various Joint Types*, Proc. Pipelines 2005: Optimizing Pipeline Design, Operations, and Maintenance in Today's Economy, C. Vipulanandan and R. Ortega, Eds., American Society of Civil Engineers, Reston, VA, pp. 1101-1116.

Star Pipe Products (2005), product literature

Thorley, A., and J. Atkinson (1994), *Guide to the Design of Thrust Blocks for Buried Pressure Pipelines*, Report 128, Construction Industry Research and Information Association, Westminster, London, pp.16-17.