Bulldog Information Report

BDIR 04.12.09

A Discussion of Entry Pit Dimensions for PVC Products Installed By Horizontal Directional Drilling

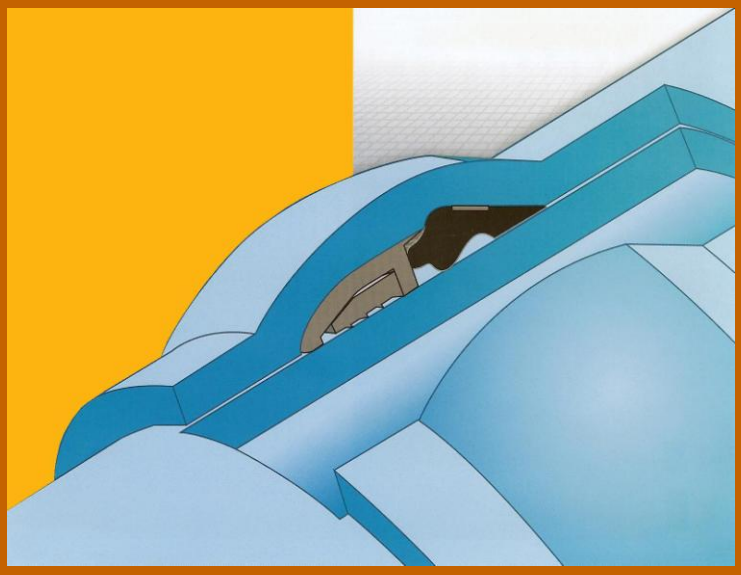

Preface

This discussion provides items for Horizontal Directional Drilling (HDD) installers to consider when using PVC products and planning their entry pit. This discussion is not intended to replace the manufacturer's installation instructions or serve as a substitute for them.

Introduction

A frequently asked question concerns the allowable entry angle for PVC pipe that employs the Bulldog Restraint System™ and is being installed by HDD. The short answer is that typical entry angles (6 to 15 degrees) used for other HDD products may also be used with this product as long as:

- The pipe is not bent tighter than the allowable bending radius, and
- The pipe's maximum unsupported length is not exceeded.

Meeting these requirements is simple. It just takes a little planning to dig an entry pit that will allow these requirements to be met.

The minimum bending radius recommended for AWWA C900 pipe is 250 times the pipe's outside diameter. This recommendation is given in the AWWA installation standard for PVC pipe, which is AWWA C605. Table 1 lists the minimum bending radii for AWWA C900 product and the allowable offset. Figure 1 has a sketch describing these two dimensions. The maximum allowable offset is based on a 20 foot length of pipe, which is the standard laying length for C900.

Table 1. Minimum Bending Radii and Offsets for AWW C900 Pipe

Nominal Diameter (Inches)	Minimum Bending Radius (Feet)	Maximum Allowable Offset (Inches)
4	100	24
6	144	17
8	189	13
10	232	10
12	275	9

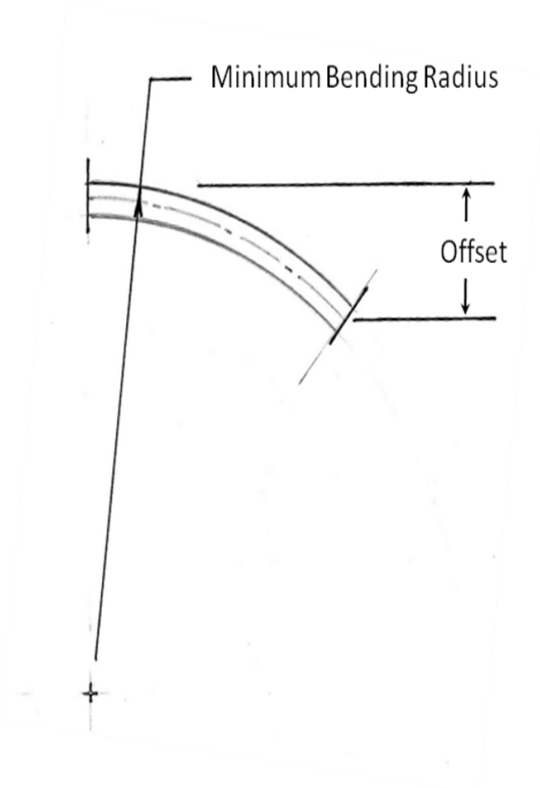

Figure 1. Sketch showing a bending radius and the resulting offset for a length of pipe.

Table 2 (on the next page) has been developed to simplify getting the information needed for digging an entry pit of sufficient length and depth. The table has been developed for common entry angles, and it assumes that the existing grade is flat. Using a similar approach, entry pit dimensions can be easily calculated for other entry angles and surface grades.

Figure 2 shows the dimensions and angles for the entry pit.

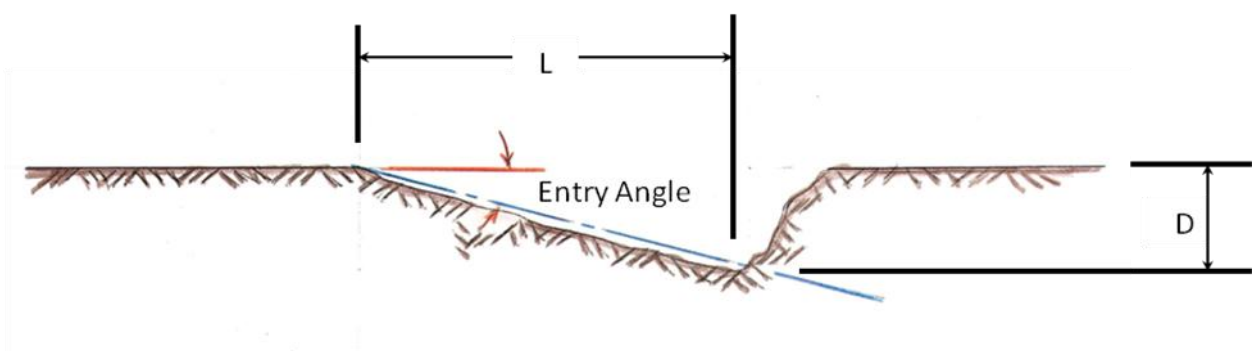

Figure 2. Entry pit dimensions and angles.

Table 2. Entry Pit Dimensions

Nominal Diameter (Inches)	Entry Angle (Degrees)	Pit Depth (Feet)	Pit Length (Feet)
4	6	0.5	10.5
	7	0.7	12.2
	8	1.0	13.9
	9	1.2	15.6
	10	1.5	17.4
	11	1.8	19.1
	12	2.2	20.8
	13	2.6	22.5
	14	3.0	24.2
	15	3.4	25.9
6	6	0.8	15.0
	7	1.1	17.5
	8	1.4	20.0
	9	1.8	22.5
	10	2.2	25.0
	11	2.6	27.4
	12	3.1	29.9
	13	3.7	32.3
	14	4.3	34.8
	15	4.9	37.2
8	6	1.0	19.7
	7	1.4	23.0
	8	1.8	26.2
	9	2.3	29.5
	10	2.9	32.7
	11	3.5	36.0
	12	4.1	39.2
	13	4.8	42.4
	14	5.6	45.6
	15	6.4	48.8
10	6	1.3	24.2
	7	1.7	28.2
	8	2.3	32.2
	9	2.8	36.2
	10	3.5	40.2
	11	4.2	44.1
	12	5.1	48.1
	13	5.9	52.0
	14	6.9	55.9
	15	7.9	59.9
12	6	1.5	28.7
	7	2.0	33.5
	8	2.7	38.3
	9	3.4	43.0
	10	4.2	47.8
	11	5.1	52.5
	12	6.0	57.2
	13	7.0	61.9
	14	8.2	66.5
	15	9.4	71.2

Recommendations for the maximum unsupported length have also been developed for PVC pipe. The applications in which this information is helpful are casing projects or above ground installations where the pipe is suspended by pipe hangers. Recommendations for the maximum unsupported length may be found in *The Handbook of PVC Pipe: Design and*

Construction. The upper limit for the unsupported length is the laying length of the product, which is 20 feet for AWWA C900 pipe. We recommend this maximum unsupported length for HDD applications. Figure 3 shows an entry pit for a 12-inch diameter pipe string which is being installed with a 15 degree entry angle. The length and depth recommended in Table 2 were followed, but the pipe string will have an unsupported length of approximately 72 feet, which far exceeds the allowable of 20 feet. Thus, the entry pit shown in Figure 3 is unacceptable. Pipe stands with rollers would be needed to support the pipe string and reduce the span length to below 20 feet.

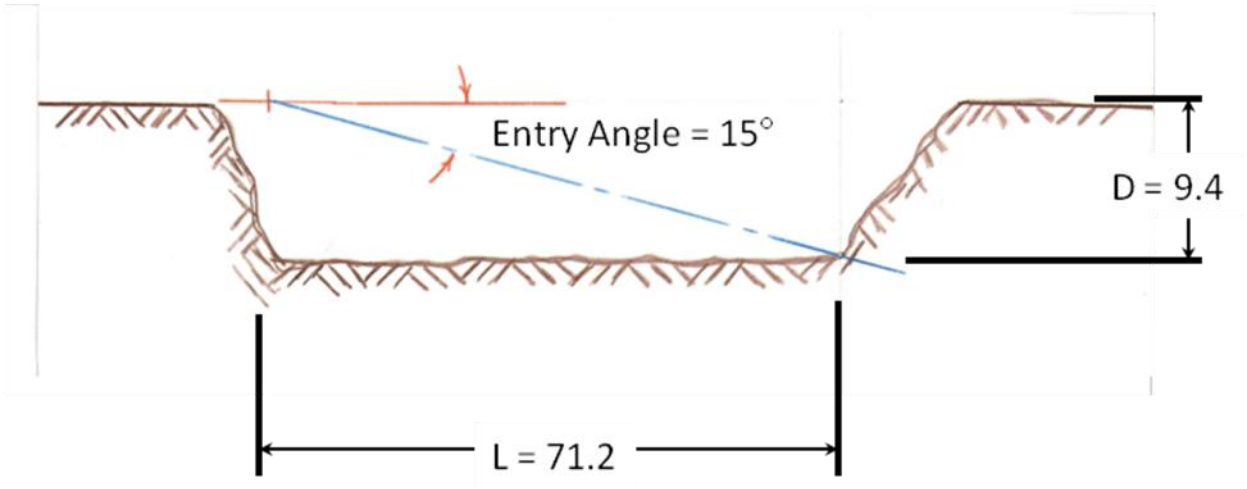

Figure 3. Installing the 12-inch diameter pipe string in this entry pit would violate the permissible unsupported length.

Figure 4 shows an example of an entry pit that allows the pipe string to be installed without exceeding either the allowable bending radius or the maximum unsupported length. Making such a pit is simple if the dimensions provided in this memo are observed.

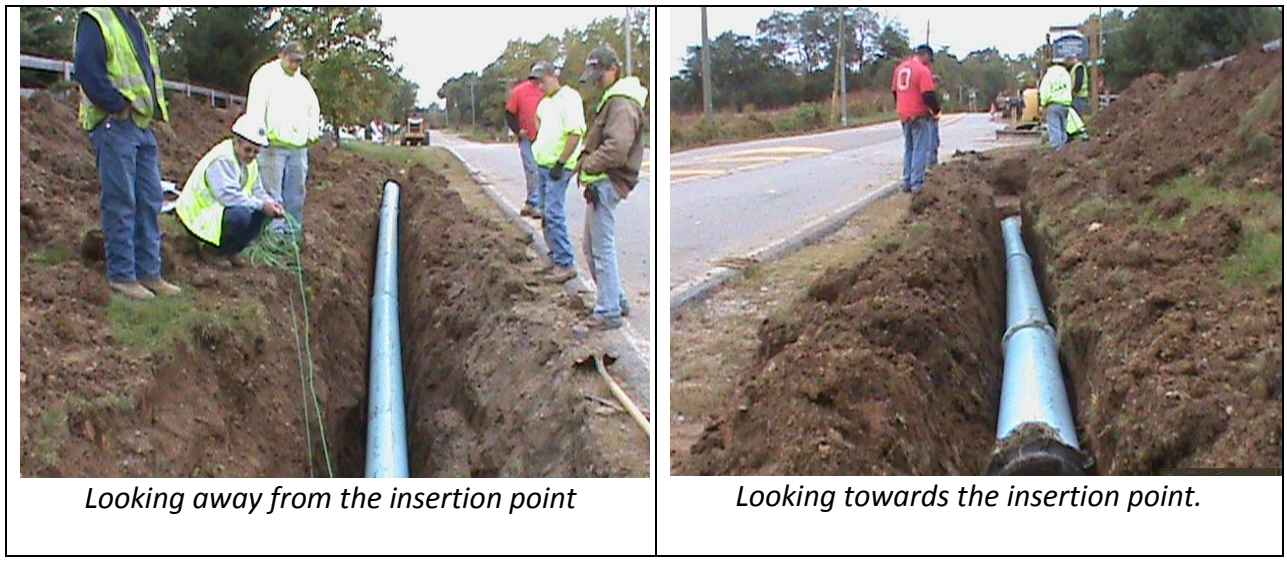

Looking away from the insertion point | *Looking towards the insertion point.*

Figure 4. Example of a proper entry pit.